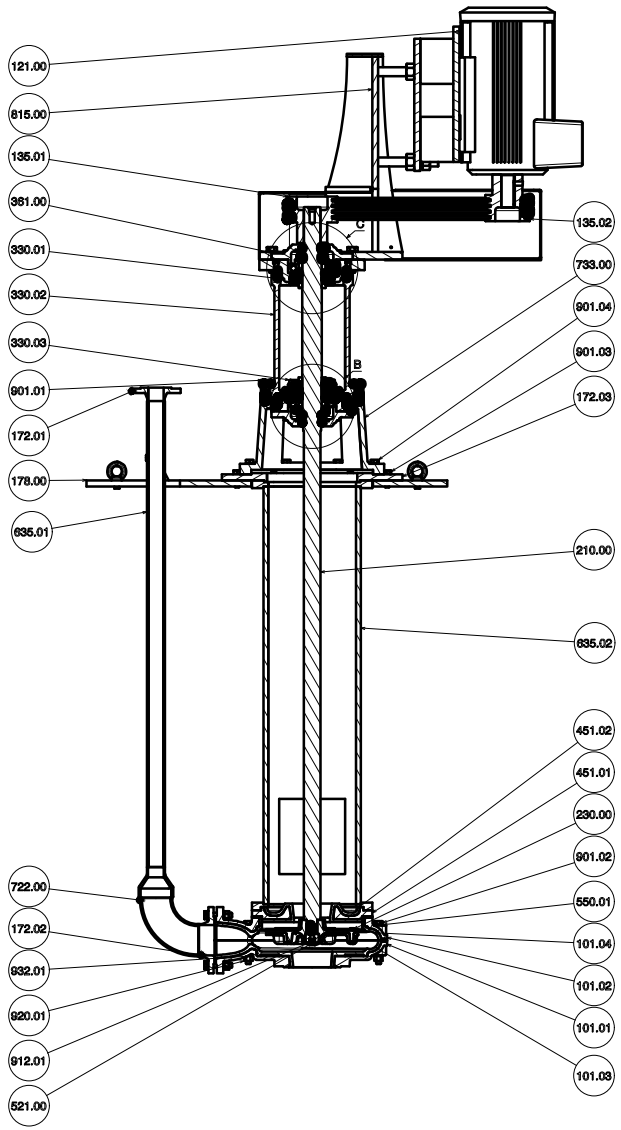

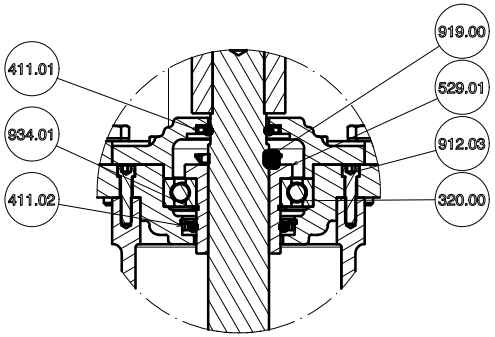

Detail C

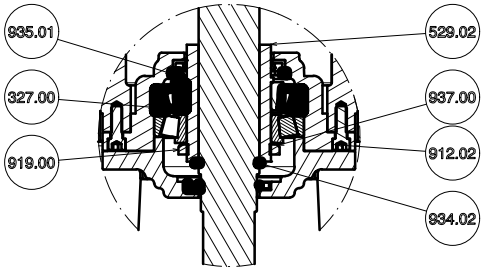

Detail B

No.	Part Name	Material	QTY
101.01	Casing (Suction Side)	Cast Iron	1
101.02	Casing (Stuffing Box Side)	Cast Iron	1
101.03	Casing Liner (Suction Side)	Rubber	1
101.04	Casing Liner (Stuffing Box Side)	Rubber	1
121.00	Electro Motor	Multi Material	1
135.01	Pully	Carbon Steel	1
135.02	Pully	Carbon Steel	1
172.01	Flange	A105	1
172.02	Flange	A105	1
172.03	Plate	ST37	1
178.00	Skid	ST37	1
210.00	Shaft	Stainless Steel	1
230.00	Impeller	Rubber Lined	1
320.00	Deep Groove Ball Bearing	Standard	1
327.00	Tapered Roller Bearing	Standard	1
330.01	Bearing Housing	A48 Class 40B	1
330.02	Bearing Housing	A48 Class 40B	1
330.03	Bearing Housing	A48 Class 40B	1
361.00	Bearing Housing Cover	A48 Class 40B	1
411.01	Oil Seal	NBR	1
411.02	Oil Seal	NBR	1
451.01	Stuffing Box	A48 Class 40B	1
451.02	Stuffing Box Liner	Rubber	1
521.00	Impeller Bush	A48 Class 40B	1
529.01	Bearing Sleeve	A276 Type 420	1
529.02	Bearing Sleeve	A276 Type 420	1
550.01	Normal Washer	A193 B8 M	1
635.01	Pipe	A106	1
635.02	Pipe	A106	1
722.00	Elbow	A106	1
733.00	Casing Connector Piece	A48 Class 40 B	1
815.00	Electromotor Connector Piece	ST37	1
901.01	Hex Head Bolt	A193 B7	4
901.02	Hex Head Bolt	A193 B7	6
901.03	Hex Head Bolt	A193 B7	8
901.04	Hex Head Bolt	A193 B7	8
912.01	Cylindrical Head Cap Screw	A193 B8 M	1
912.02	Cylindrical Head Cap Screw	A193 B8 M	4
912.03	Cylindrical Head Cap Screw	A193 B8 M	4
919.00	Chuck Nut	A193 B8 M	1
920.01	Hex Head Nut	A193 B8 M	4
932.01	Spring Bush	A193 B8 M	4
934.01	Spring Key Shaft	A193 B7	1
934.02	Spring Key Shaft	A193 B7	1
-	-	-	-
-	-	-	-
-	-	-	-